Measurements of Multicomponent Adsorption Equilibria of N_2, CH_4, CO_2 and H_2S and some of their mixtures on activated carbon Norit R1 Extra

R. Staudt, F. Dreisbach, M. Löhr, J.U. Keller
Institute of Fluid- & Thermodynamics
University of Siegen, D - 57068 Siegen, Germany

Introduction

As a rule in technical adsorption processes competing adsorption of different components of a gas mixture, e.g. separation processes or carrier and sample gas, occurs. For design and development of proper procedures base data are needed. These, beneath others, are the adsorption equilibria of all pure components, which usually have to be determined by measurements. Time consuming measurements for the involved mixtures have to be performed, too, because predictive calculation methods often fail. Hence the adsorption equilibria of the pure gases CH_4, N_2, Ar, H_2S, CO and CO_2 have been measured gravimetrically in the pressure range $0 < P < 15$ MPa at ambient temperature $T = 298$ K on the activated carbon (AC) Norit R1 Extra. Coadsorption measurements of the binary mixtures CH_4/N_2, CH_4/CO_2, CO_2/N_2 and CH_4/H_2S on the same AC have been realized at various adsorptive concentrations in the range of pressure and at the temperature mentioned above. The adsorption equilibria of five ternary mixtures $CH_4/N_2/CO_2$ have been determined at the same conditions. The thermodynamic consistence of the mixture data has been tested according to literature [1, 2]. The experimental data can be correlated using a generalized Langmuir-Freundlich adsorption isotherm [3].

Experimental

The gravimetric method is used to measure the pure adsorption isotherms and the volume-gravimetric method to measure the binary coadsorption equilibria [4, 5]. The adsorption equilibria of the ternary mixtures have been determined by the volume-chromatographic method. To investigate adsorption equilibria of corrosive gases we have used a microbalance with magnetic suspension. The experimental setup is shown in Fig. 1. The working range of the adsorption device is $250\ K < T < 373\ K$ and $0 < p < 15$ MPa. The maximum uncertainty of the measured amounts adsorbed is $\Delta n/n << 1\ \%$ (pure components) and $\Delta n/n < 2.5\ \%$ (mixtures).

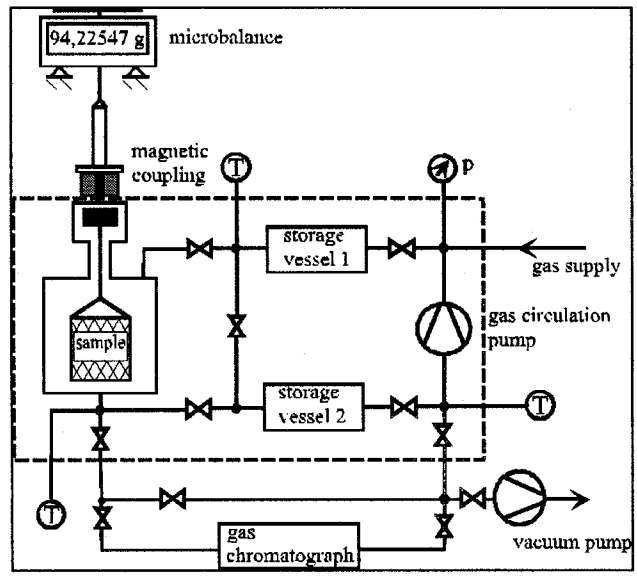

Figure 1. Experimental setup for measurements of coadsorption isotherms [6].

Correlation

The experimental data have been correlated by a thermodynamic consistent adsorption isotherm (AI) for multicomponent adsorbates ($N \geq 1$) with a load dependent adsorption energy [3]. This equation is able to describe the adsorption equilibria of gas mixtures on porous solids and considers the fractal dimension of the internal surface of the porous solid. Using the partial pressures of the adsorptive $p_1, ..., p_N$ as independent variables the number of moles of component i being adsorbed at temperature T is given by the following equation:

$$n_i = n_\infty(T, m^s)\, \Phi\,(p^*) \times$$

$$\times \left[\alpha_i\, c_i\, p_i^{\alpha_i} + \frac{p_i}{\mathbb{R}\,T} \sum_m^N \alpha_m\, c_m\, p_m^{\alpha_m} \left(\frac{\partial\, q_m}{\partial\, p_i} \right)_T \right]$$

with: $p^* = \sum_k c_k p_k^{\alpha_i}$.

The limiting value of number of moles adsorbed for partial pressures $p_i \rightarrow \infty$ is $n_{i\infty} = \alpha_i n_\infty$. The mol number n_∞ is a characteristic parameter of the adsorbens and is independent of the adsorptive. The constants α_i can be related to the fractal Dimension D of the internal surface of the adsorbens. The characteristic function $\Phi(p^*)$ must be chosen according to the type of adsorption isotherm to be considered. We have used a Langmuir-Freundlich type isotherm assuming a mono-layer adsorption, so that $\Phi(p^*)$ is given by

$$\Phi(p^*) = \frac{1}{1 + p^*}$$

The parameters c_k, k = 1, ..., N are related to the adsorption energies q_k by

$$c_k = p_{k\infty} e^{-q_k/RT}$$

For high temperatures $T \rightarrow \infty$ we get the hypothetical gas phase pressure $p_{k\infty}$ at which an adsorbate consists of pure component k only. The adsorption energy is considered to depend on the load adsorbed, which can be reflected in a dependence on the sorptive's pressure, i.e. $q_k = q_k(p_1 \ldots p_N)$.

Results and Conclusion

The adsorption equilibria of the pure gases Ar, CH_4, CO_2, CO, N_2, He, H_2S and NH_3, the binary mixtures CH_4/CO_2 CH_4/N_2 CO_2/N_2 CH_4/H_2S and CH_4/CO and the ternary mixtures $CH_4/CO_2/N_2$ on AC Norit R1 Extra have been measured at 298 K in the pressure range vac. < p < 15 MPa. All adsorption processes in our experiments seem to be completely reversible, i.e. do not indicate any type of hysteresis or any other irreversible effect. All the curves represent AIs of Type I (IUPAC classification) reflecting mainly adsorption in the micro- and mesopores of the activated carbon.

Figure 2 shows the experimental results and the correlation fit with the generalized Langmuir-Freundlich AI of the system CH_4/CO_2. The agreement between the experimental values and the correlation is $\Delta n/n < 3$ %.

The selectivities for the same system are shown in Figure 3. The prediction of the selectivities using the IAST [1] is quite poor according to the real behaviour of the adsorbed phase. The observed deviations between predicted and measured data are much to large to be satisfying and almost uninfluenced by the implementation of a real adsorptive phase. Improvements can only be expected by introducing information of the binary mixture measurements and by using a combined correlation and prediction procedure.

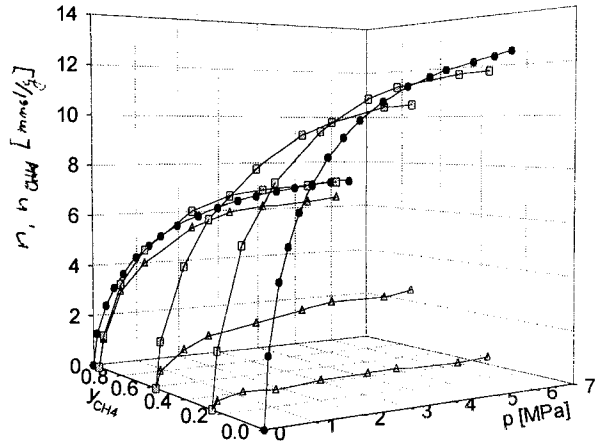

Figure 2. Adsorption equilibria of pure CH_4 and CO_2 and their binary mixtures on AC Norit R1 Extra, T = 298 K, ● pure isotherms, ■ total load of binary mixtures, ▲ partial load of CH_4, lines correlation fit.

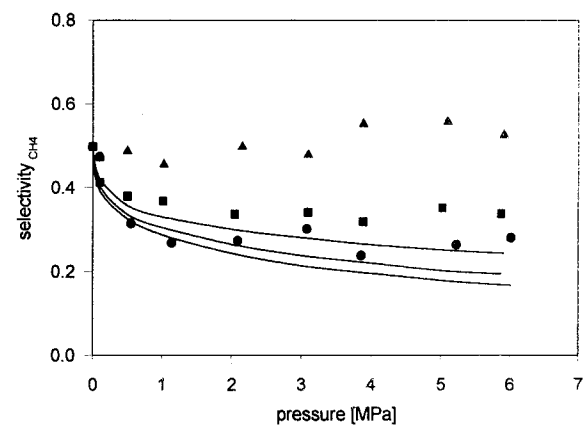

Figure 3. Selectivities for the system CH_4/CO_2 on AC Norit R1 Extra, T = 298 K, ● y_{CH4} = 0.2, ■ y_{CH4}= 0.5, ▲ y_{CH4}= 0.95, lines IAST

References

1. Myers, A.L.; Prausnitz, J.M., AIChE Journal, 11; 1; (1965) p. 121.
2. Talu, O. Myers, A.L., AIChE Journal, 34, 11, (1988), p. 1887.
3. Keller, J.U.; Physica A, 166, (1990), p. 180.
4. Staudt, R.; Saller, G.; Tomalla, M.; Keller, J.U., Ber. Bunsenges. Phys. Chem., 97, (1993), p. 98.
5. Keller, J.U.; Staudt, R.; Tomalla, M., Ber. Bunsenges. Phys. Chem. 96 No. 1, (1992), p. 28.
6. Dreisbach, F., Staudt R., Tomalla M., Keller, J.U., Proc. of the 5th Int. Conf. on Fund. of Adsorption, M.D. LeVan (Eds), Kluwer Academic Publishers, Boston, (1996) p. 259.